INSTRUCTION SHEET

ST-130-CE-A / Rev1 02-20

CHUTE EXTENSION 48"

Estimated assembly time: 60 min

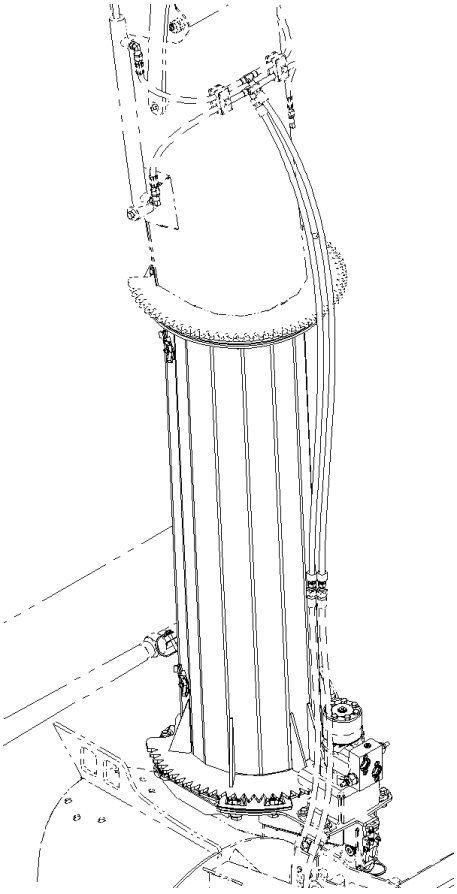

For SABER ST-130-69-64 & ST-150-69-64 Snowblowers

PLEASE READ THIS MANUAL CAREFULLY
KEEP READY AT ALL TIMES

INTRODUCTION

This is the Instruction Sheet for ST-130-CE Chute extension. Consult the Operator's Manual of that Implement for related Safety, Operation and Troubleshooting Instructions.

Illustrations

The illustrations may not necessarily reproduce the full detail and the exact shape of the parts or depict the actual models, but are intended for reference only.

Direction Reference

All references to right and left, forward or rearward are determined by those seen by the operator located behind the equipment.

SAFETY FIRST

This symbol, the industry's "Safety Alert Symbol", is used throughout this manual and on labels on the machine itself to warn of the possibility of personal injury. Read these instructions carefully. It is essential that you read the instructions and safety regulations before you attempt to assemble or use this unit.

DANGER :	Indicates an imminently hazardous situation which, if not avoided, will result in death or serious injury.
WARNING :	Indicates a potentially hazardous situation which, if not avoided, could result in death or serious injury.
CAUTION :	Indicates a potentially hazardous situation which, if not avoided, may result in minor or moderate injury.
IMPORTANT :	Indicates that equipment or property damage could result if instructions are not followed.
NOTE :	Gives helpful information.

GENERAL SAFETY INFORMATION

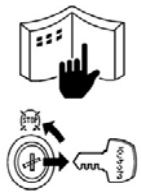

BEFORE YOU START SERVICE

- Read all instructions and safety instructions in this manual and on your machine safety decals.
- Clean the work area and machine.
- Park the machine on a stable and level ground, and set the parking brake.
- Lower the implement to the ground.
- Stop the engine, then remove the key.
- Disconnect the battery negative cable.
- Hang a **"DO NOT OPERATE"** tag in the operator station.

No Smoking or Open Flames while Fueling

- Fuel is extremely flammable and dangerous. Never smoke near fuel. If fuel is spilled on the machine, its engine, or electrical parts, it may cause a fire. If fuel is spilled, wipe it all up immediately.
- Never smoke while filling the machine with fuel. And always tighten the fuel cap securely and wipe up any spilled fuel.

- When performing maintenance on the equipment, hang the DO NOT OPERATE sign where it will be obvious from and around the driver's seat.
- When performing maintenance or repairs, always lower attachments to the ground, stop the engine and secure the tracks with blocks.
- When performing maintenance on the equipment, always disconnect the negative battery cable.
- Before using tools, make sure you understand how to use them correctly and use tools in good condition and of the right size for the job.

- Before getting on/off of the machine, clean off around the steps so there is no mud on them. Always give yourself 3-point support when getting on/off the machine.

CAUTION

- **3-point support means using both legs and one hand or both hands and one leg as you climb up/down.**

START SAFELY

- Do not do the procedures below when you start the engine.
  - short across starter terminals
  - bypass the safety start switch
- Do not alter or remove any part of machine safety system.
- Before you start the engine, make sure that all shift levers are in neutral positions or in disengaged positions.
- Do not start the engine when you stay on the ground. Start the engine only from operator's seat.

- Do not remove the radiator cap when the engine operates, or immediately after it stops. If not, hot water can spout out from the radiator. Only remove the radiator cap when it is at a sufficiently low temperature to touch with bare hands. Slowly loosen the cap to release the pressure before you remove it fully.

Starting the Machine Safely

- Before starting the engine, always sit in the driver's seat and make sure the area is safe and clear.
- As it is dangerous, never start the engine from anywhere but the driver's seat.
- Always check and make sure control lever(s) are not engaged before starting the engine.
- Never start the engine by hot-wiring the starter circuit. This is not only dangerous, but may damage the machine.

- The engine, muffler, radiator, hydraulic line, etc., have parts that remain very hot even after the engine has been stopped. Be sure to avoid these parts, as touching them can result in burns. Radiator coolant, hydraulic fluid and oil also remain hot. Therefore, do not attempt to remove caps and plugs, etc., before these fluids have sufficiently cooled.
- Make sure the coolant temperature has dropped sufficiently before opening the radiator cap. Also, since the inside of the radiator is pressurized, when removing the cap, first loosen it to release the pressure before removing the cap completely.

- Wear clothes appropriate for working on equipment. Do not wear loose-fitting clothes as they may catch on the machine controls.
- When working on the equipment, use all safety gear, such as a helmet, safety glasses and shoes, that are required by law or regulation.
- Never perform maintenance while drowsy or under the influence of alcohol or drugs.

- Grease is under high pressure inside the hydraulic cylinder. It is very dangerous to loosen a grease nipple quickly as it may shoot off. Always loosen grease nipples slowly.
- And never face a grease nipple while loosening it.

Be Ready for an Emergency

- Keep a first-aid kit and fire extinguisher close at hand so you can use it when needed.
- Keep emergency contact information for doctors, hospitals and ERs handy.

PREVENT A FIRE

- Fuel is very flammable and explosive under some conditions. Do not smoke or let flames or sparks in your work area.
- To prevent sparks from an accidental short circuit, always disconnect the battery negative cable first and connect it last.
- The battery gas can cause an explosion. Keep the sparks and open flame away from the top of battery, especially when you charge the battery.
- Make sure that you do not spill fuel on the engine.

KEEP A GOOD AIRFLOW IN THE WORK AREA

- If the engine is in operation, make sure that the area has good airflow. Do not operate the engine in a closed area. The exhaust gas contains poisonous carbon monoxide.

Dispose of Waste Fluids Properly

- Never dispose of waste fluids on the ground, in the gutter, a river, pond or lake. Always dispose of hazardous substances like waste oil, coolant and electrolytic fluid in accordance with the relevant environmental protection regulations.
- Keep the safety plates clean so they can be read. If a safety plate is damaged and comes off or becomes illegible, put a plate with the same warnings back in its place.

GENERAL SAFETY INFORMATION

	• The pressure in the hydraulic circuit stays at pressure even after the engine stops. Before removing parts, such as hydraulic devices from the machine, first release the pressure. Please note that when releasing residual pressure, the machine itself and/or implements may move without warning, so be very careful when releasing the pressure. • Oil gushing out under pressure is extremely dangerous as it may pierce your skin or your eyes. Similarly, oil leaking out of pinholes is not visible. So when checking for oil leaks, always wear safety glasses and gloves and use a piece of cardboard or a wood block to shield yourself from oil.		• When you need to access the underside of the machine for maintenance purposes, but sure to support the machine with a safety stand. Getting under the machine while supporting the machine by machine's own hydraulic cylinder or using a hydraulic jack can be extremely dangerous in the event of a hydraulic fluid leakage or similar mishap. (1) Safety stand (2) Secure point for safety stand
	• Do not open a fuel system under high pressure. The fluid under high pressure that stays in fuel lines can cause serious injury. Do not disconnect or repair the fuel lines, sensors, or any other components between the fuel pump and injectors on engines with a common rail fuel system under high pressure. • Put on an applicable ear protective device (earmuffs or earplugs) to prevent injury against loud noises. • Be careful about electric shock. The engine generates a high voltage of more than DC100 V in the ECU and is applied to the injector.		• Whenever it is necessary to open the engine covers or hood in order to service the machine, always prop them open. • If it is absolutely necessary to run the engine while working on the machine, make sure you are clear of all rotating or moving parts. Also take care not to leave anything, such as tools or rags, near any moving parts.
	• Engage the loader control valve lock to prevent accidental actuation when the implement is not in use or during transport. Do not utilize the valve lock for machine maintenance or repair. • Do not perform machine maintenance with loader in the air. If possible, follow loader instructions to remove loader before performing maintenance. • If the machine has a backhoe, engage swing and boom locks.		

⚠ SAFETY INFORMATION

Before Operation with the Implement

1. Park the machine/implement on level ground, set the parking brake, lower the implement to the ground, place all control levers in neutral, shut off the engine and remove the ignition key and allow the rotating parts to stop BEFORE making any implement adjustments.

2. Do not put hands or feet under implement and frame.

3. Do not operate the machine/implement that is defective or has missing parts. Make sure that all recommended maintenance procedures are completed before operating the unit.

4. Keep the machine/implement clean. Snow, dirt or ice build-up can lead to malfunction or personal injury from thawing and refreezing in garage.

5. Do not modify or alter this equipment or any of its components, or any equipment function without first consulting your dealer. The manufacturer will not claim responsibility for fitment of unapproved parts and/or accessories and any damages as a result of their use.

6. Verify that all machine/implement safety protective devices are in place. Shields, guards and covers must be correctly installed at all times. When necessary to remove these for servicing, cleaning, or repair work, they must be reinstalled immediately.

7. Always make sure all implement components are properly installed and securely fastened.

8. Check for moving parts excessive wear regularly. ALWAYS USE GENUINE PARTS WHEN REPLACEMENT PARTS ARE REQUIRED.

9. Prior to operation, clear work area and mark all curbs, pipes, etc. that cannot be moved.

10. Inspect the machine/implement after striking any foreign object to assure that all machine/implement parts are safe and secure and not damaged.

11. Handle fuel with care, as it is highly flammable. Use approved fuel container. Always refuel using a properly grounded system.

12. Never add fuel to a running engine or a hot engine.

13. Fill fuel tank outdoors with extreme care. Never fill fuel tank indoors. Replace fuel cap securely and wipe up spilled fuel.

14. Check all machine controls regularly and adjust where necessary. Make sure that the brakes are evenly adjusted. Periodically check all nuts and bolts for tightness, especially wheel hub and rim nuts.

15. Make sure the machine is counterweighted and has tire chains for better traction and stability as recommended by your dealer. Weights provide the necessary balance to improve stability, traction and steering. Use only those recommended by your dealer.

OPERATION – safety information

During Operation with the Implement

1. Never allow anyone to operate the machine and implement until they have read the manuals completely and are thoroughly familiar with their basic operation. Lack of operating knowledge can lead to accidents.

2. Do not allow anyone to ride on the machine/implement at any time. The only one allowed is the operator that MUST sit in the driver seat.

3. Never allow anyone near the work area.

4. Never operate the implement without safety protective devices in place. All machine/implement shields, guards and covers must be correctly installed at all times.

5. Park the machine/implement on level ground, place the transmission in neutral, set the parking brake, disengage the driving system, lower the equipment to the ground, place all levers including auxiliary control levers in neutral, shut off the engine and remove the ignition key BEFORE LEAVING THE MACHINE.

6. Always drive the machine at speeds compatible with safety, especially when operating over rough ground, crossing ditches, slippery surface or when turning.

7. Use extra caution when backing up.

8. Operate only with good visibility and during daylight hours, or when the area is well lit with bright artificial light.

9. Exercise extreme caution when operating on or crossing a gravel drive, walks, or roads. Stay alert for hidden hazards or traffic.

10. Never park the machine on a steep slope. Do not attempt to operate on steep slopes. If operating on slopes is necessary, exercise extreme caution when changing direction.

INSTALLATION

WARNING: To avoid serious personal injury or death: Read and understand the SAFETY PRECAUTIONS on previous pages before installation and operation. Perform all assembly with unit properly blocked and supported. TORQUE ALL THE BOLTS ACCORDING TO THE TORQUE SPECIFICATION TABLE ENCLOSED AT THE END OF THE INSTRUCTION SHEET.

WARNING: To avoid serious personal injury or death: Park the tractor on level ground, place the transmission in neutral, set the parking brake, disengage the drive system, put all levers to neutral, shut off the engine, remove the ignition key and wait for all movement to stop BEFORE starting installation.

Installation of the Chute Extension

1. **Figure 1:** Disconnect the hoses (item 1).
2. **Figure 2:** Remove the hardware (items 2-3-4) and the four guides (item 5). Then remove the chute (item 1). Remove the hardware (items 7-8-9-10-11) and the gear shield (item 6).

WARNING: To avoid serious personal injury or death: You can now perform the Installation of the chute on the chute extension, but you must make sure to block the chute extension to prevent it from tipping over.

WARNING: To avoid serious personal injury: Escaping hydraulic/diesel fluid under pressure can penetrate the skin causing serious injury.

- **Do not use your hands to check for leaks. Use a piece of cardboard or paper to search for leaks**

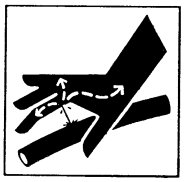

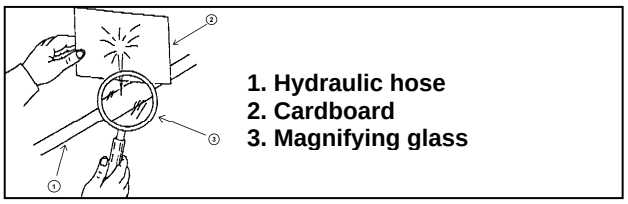

- **Stop engine and relieve pressure before connecting or disconnecting lines.**
- **Tighten all connections before starting engine or pressurizing lines.**

If any fluid is injected into the skin, obtain medical attention immediately or gangrene may result.

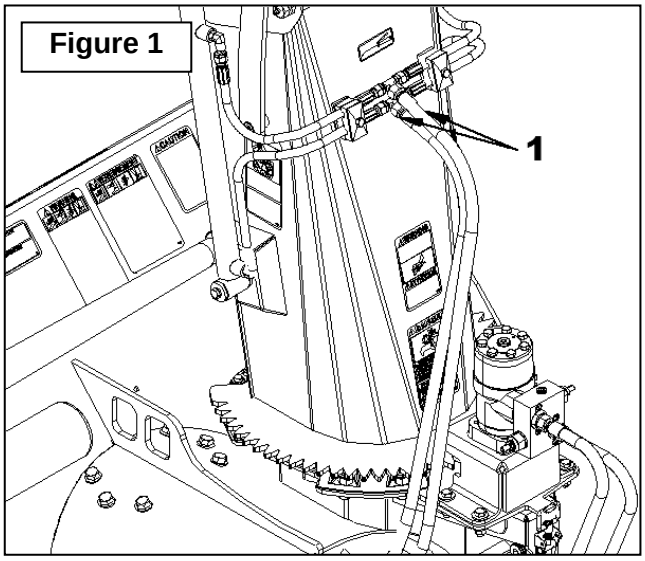

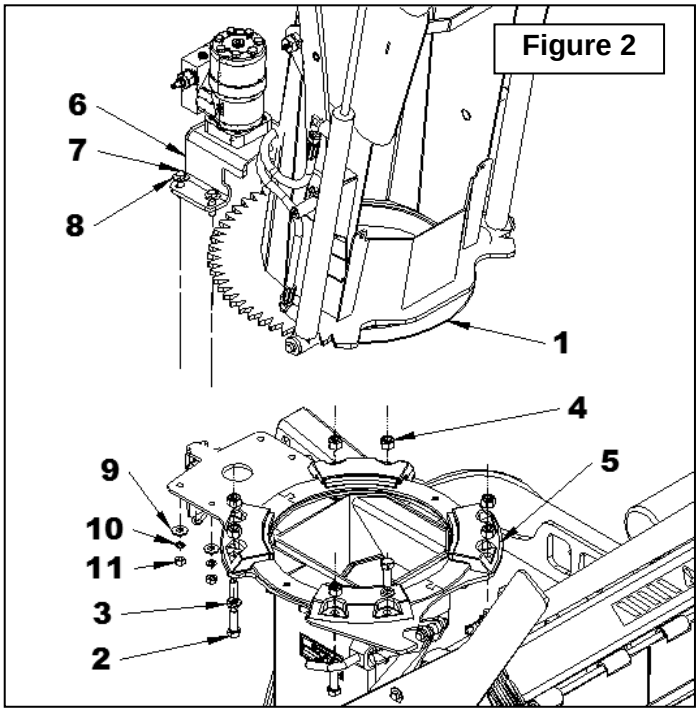

INSTALLATION

3. **Figure 2a** : At this stage check the height (A) of the rotation motor as shown. If the dimension of (A) is more than 6" go to step 6. If the dimension of (A) is approximately 5.3", you must change the engine to a more powerful engine. The engine to be used is a 250cc engine #3910103.
4. **Figure 2a** : Remove the gear and its 1/4" hardware (items 3-4-5). Disassemble the engine and the gear shield by removing the 3/8" bolts and flat washers (items 6-7).
5. **Figure 2a** : Install the new motor on the gear shield (item 2).
6. **Figure 3:** Reinstall the gear shield (item 1) with the rear reinforcement (item 2) and the motor spacers (item 7) using 3/8" x 1 1/2" bolts (item 3), flat washers (item 4), lockwashers (item 5) and nuts (item 6) previously removed and as shown in the figure.
7. **Figure 2a** : Check the alignment of the height between the chute gear and the motor gear. If necessary, use 3/8" flat washers (item 8) to adjust the alignment.

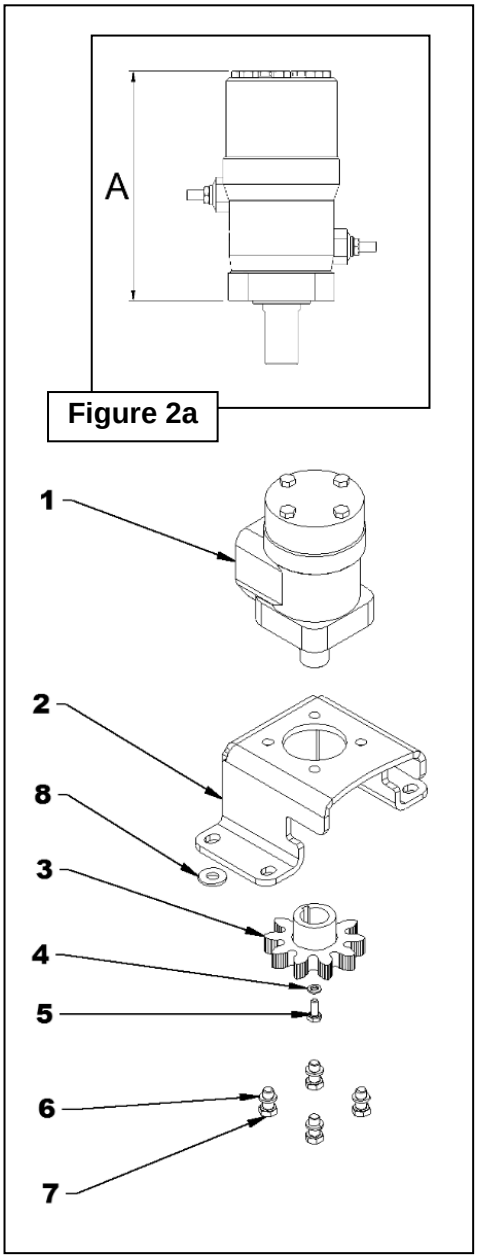

Figure 2a

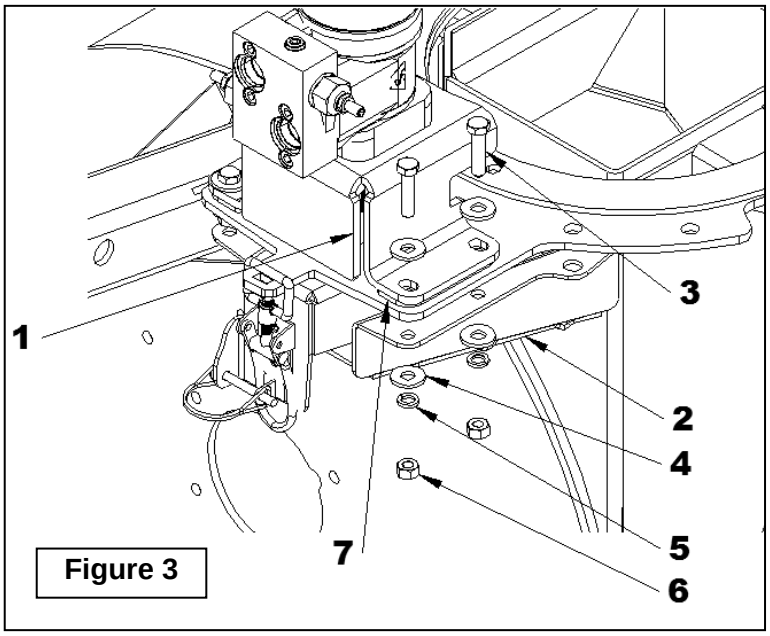

Figure 3

INSTALLATION

8. **Figure 4:** Install the chute extension (item 1) with the four guides (item 2), the four chute spacers (item 3) and the side reinforcements (item 4) and secure on the side of the side reinforcements with four 1/2" bolts x 2" (item 8), four 1/2" lockwashers (item 6), four 1/2" flat washers (item 9) and four 1/2" nylon insert locknuts (item 7). Continue to secure the guides with four 1/2" x 1 3/4" bolts (item 5), four 1/2" lockwashers (item 6) and four 1/2" nylon insert locknuts (item 7) in the order shown in the figure.

Figure 4

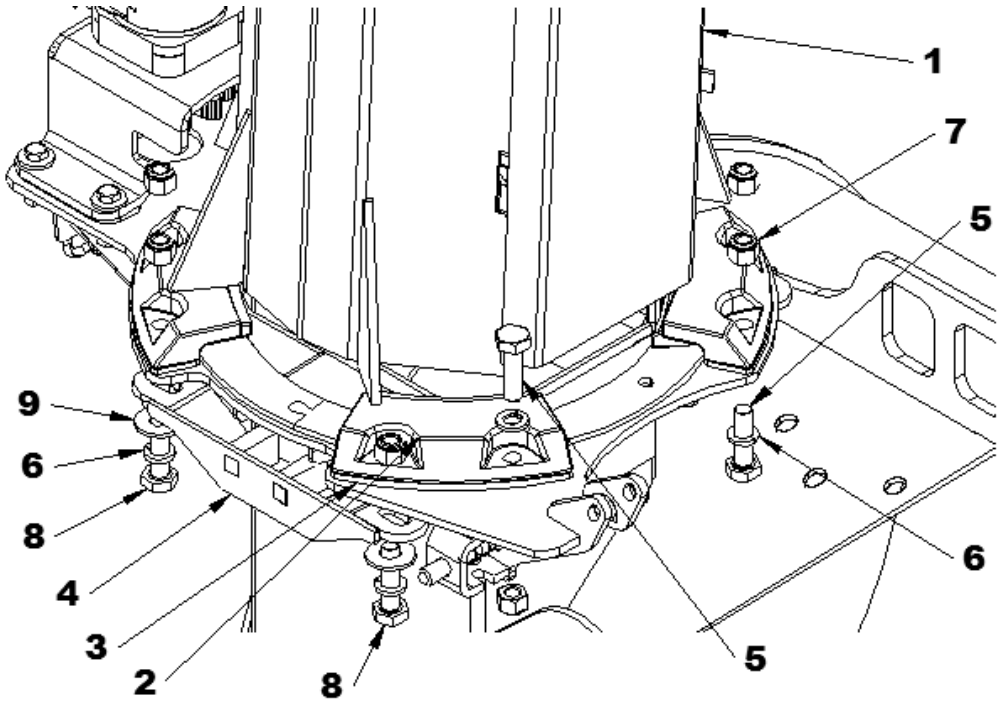

INSTALLATION

Installation of the Chute on the Chute Extension

1. **Figure 5:** Install the chute on the chute extension (item 2), by inserting the folded plate and the 1/8" plate (items 3-4) then the two 1/4" bracket plates (item 5) between the base and the gear of the chute as illustrated in the figure.
2. **Figure 5:** Attach the chute with eight 1/2" x 1 1/2" bolts (item 6), eight 1/2" lockwashers (item 7) and eight 1/2" nylon insert locknuts (item 8) in the order shown in the figure.
3. **Figure 6:** Connect the new hoses (item 1) to those previously disconnected from the chute.

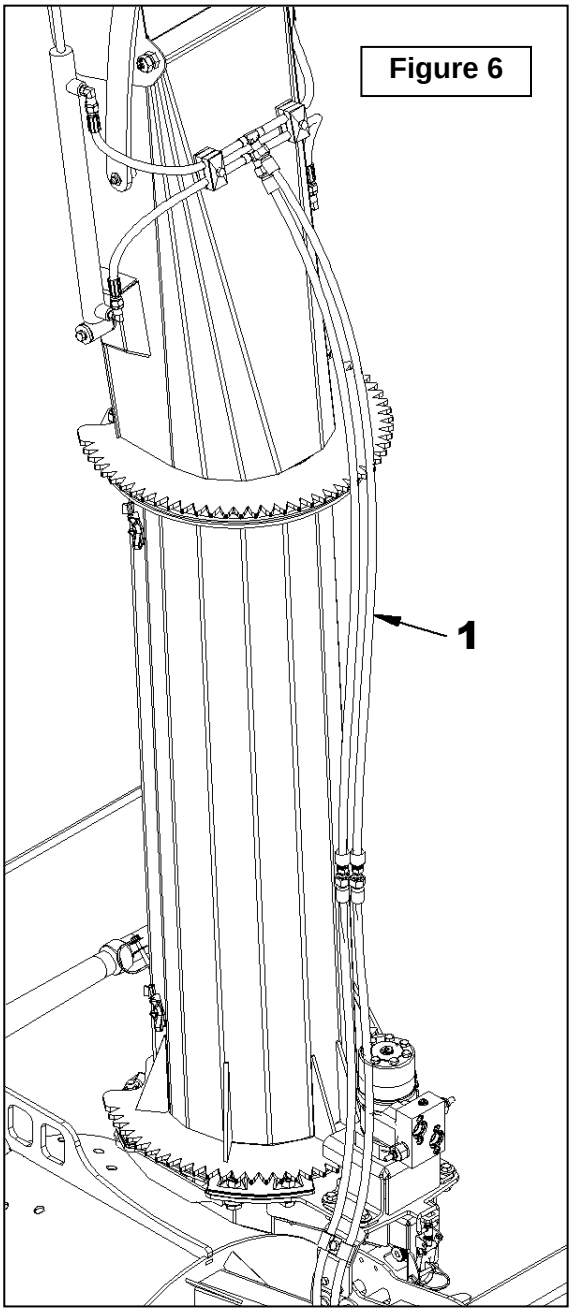

Figure 6

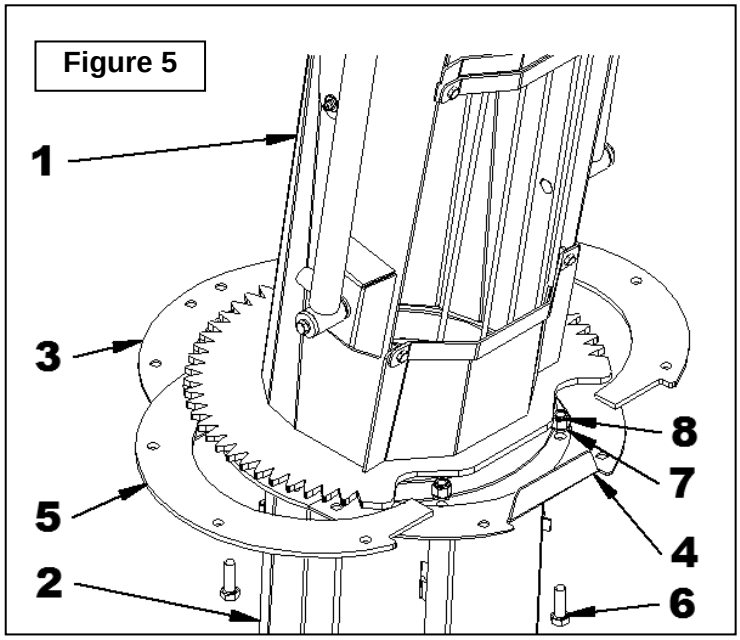

Figure 5

PARTS

CHUTE EXTENSION

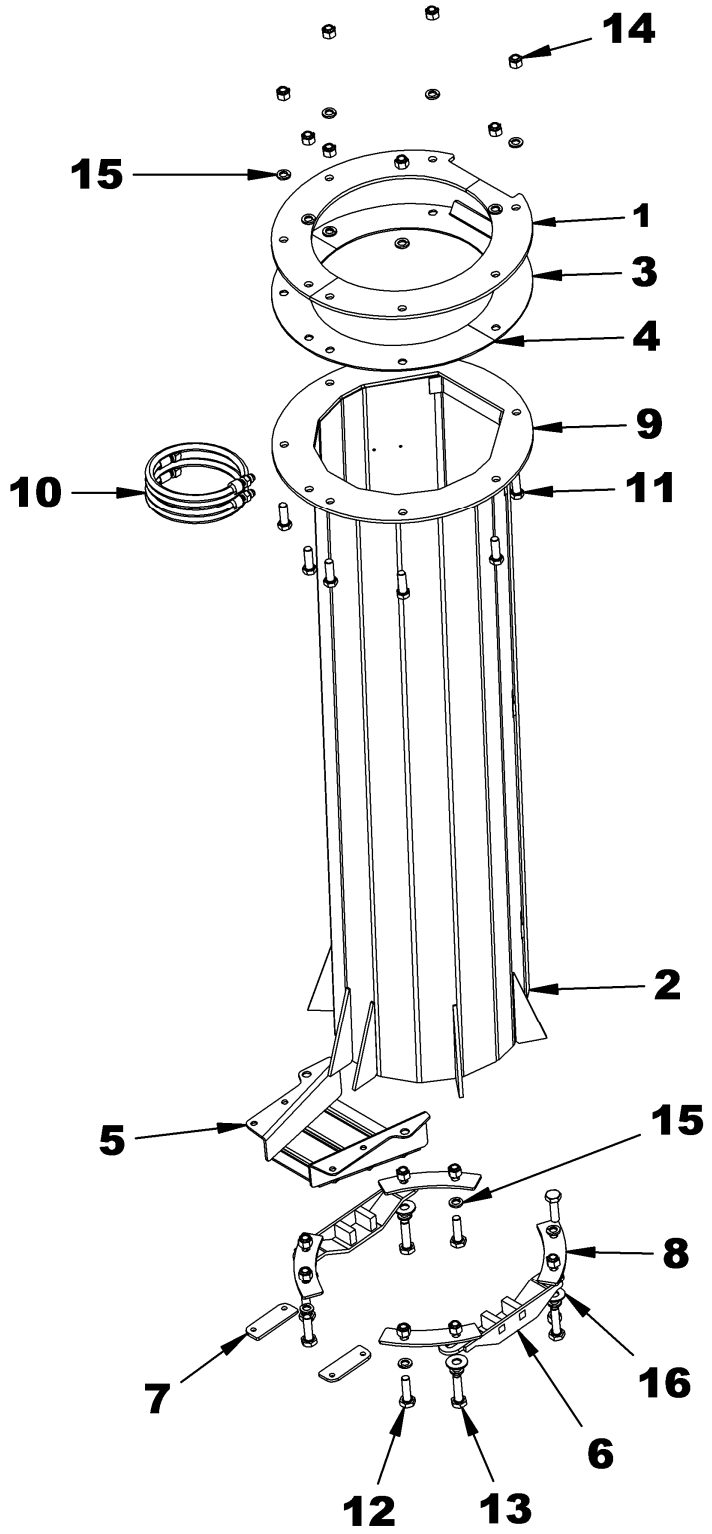

PARTS

CHUTE EXTENSION			
REF.	DESCRIPTION	QTY	#PART#
1	Bracket 1/4"	2	672525
2	Door	1	672526
3	Bracket - folded	1	672527
4	Bracket 1/8" (11GA)	1	672528
5	Rear reinforcement	1	672529
6	Side reinforcement	2	672530
7	Motor spacer	2	672533
8	Chute spacer	4	672534
9	Chute extension	1	672543
10	Hose 3/8'' x 49'' 9/16-18JIC SWF X 9/16-18JIC M	2	3700348
11	Bolt hex 1/2"NC x 1 1/2" gr.5, PTD	8	0100070
12	Bolt hex 1/2"NC x 1 3/4" gr.5, PTD	4	0100071
13	Bolt hex 1/2"NC x 2" gr.5, PTD	4	0100073
14	Nylon insert locknut 1/2"NC PTD	16	1000011
15	Lockwasher ø1/2" PTD	16	1200006
16	Flat washer 1/2" (ø9/16" hole) PTD	4	1400006

TORQUE SPECIFICATION TABLE

GENERAL SPECIFICATION TABLE

USE THE FOLLOWING TORQUES WHEN SPECIAL TORQUES ARE NOT GIVEN

Note: These values apply to fasteners as received from supplier dry, or when lubricated with normal engine oil. They do not apply if special graphited or moly sidulphide greases or other extreme pressure lubricants are used. These values apply to dry conditions; under lubricated conditions reduce by 25% the torques in this table.

BOLT HEAD IDENTIFICATION

INCHES Bolt Size	Grade 2		Grade 5		Grade 8	
in-tpi [1]	N-m [2]	lbs-ft [3]	N-m	lbs-ft	N-m	lbs-ft
1/4" – 20NC	7.4	5.6	11	8	16	12
1/4" – 28NF	8.5	6	13	10	18	14
5/16" – 18NC	15	11	24	17	33	25
5/16" – 24NF	17	13	26	19	37	27
3/8" – 16NC	27	20	42	31	59	44
3/8" – 24NF	31	22	47	35	67	49
7/16" – 14NC	43	32	67	49	95	70
7/16" – 20NF	49	36	75	55	105	78
1/2" – 13NC	66	49	105	76	145	105
1/2" – 20NF	75	55	115	85	165	120
9/16" – 12NC	95	70	150	110	210	155
9/16" – 18NF	105	79	165	120	235	170
5/8" – 11NC	130	97	205	150	285	210
5/8" – 18NF	150	110	230	170	325	240
3/4" – 10NC	235	170	360	265	510	375
3/4" – 16NF	260	190	405	295	570	420
7/8" – 9NC	225	165	585	430	820	605
7/8" – 14NF	250	185	640	475	905	670
1" – 8NC	340	250	875	645	1230	910
1" – 12NF	370	275	955	705	1350	995
1 1/8" – 7NC	480	355	1080	795	1750	1290
1 1/8" – 12NF	540	395	1210	890	1960	1440
1 1/4" – 7NC	680	500	1520	1120	2460	1820
1 1/4" – 12NF	750	555	1680	1240	2730	2010
1 3/8" – 6NC	890	655	1990	1470	3230	2380
1 3/8" – 12NF	1010	745	2270	1670	3680	2710
1 1/2" – 6NC	1180	870	2640	1950	4290	3160
1 1/2" – 12NF	1330	980	2970	2190	4820	3560

METRIC Bolt Size	5.8 Class 5.8		8.8 Class 8.8		NP 10.9 Class 10.9	
mm$_x$pitch [4]	N-m	lbs-ft	N-m	lbs-ft	N-m	lbs-ft
M 5 X 0.8	4	3	6	5	9	7
M 6 X 1	7	5	11	8	15	11
M 8 X 1.25	17	12	26	19	36	27
M 8 X 1	18	13	28	21	39	29
M10 X 1.5	33	24	52	39	72	53
M10 X 0.75	39	29	61	45	85	62
M12 X 1.75	58	42	91	67	125	93
M12 X 1.5	60	44	95	70	130	97
M12 X 1	90	66	105	77	145	105
M14 X 2	92	68	145	105	200	150
M14 X 1.5	99	73	155	115	215	160
M16 X 2	145	105	225	165	315	230
M16 X 1.5	155	115	240	180	335	245
M18 X 2.5	195	145	310	230	405	300
M18 X 1.5	220	165	350	260	485	355
M20 X 2.5	280	205	440	325	610	450
M20 X 1.5	310	230	650	480	900	665
M24 X 3	480	355	760	560	1050	780
M24 X 2	525	390	830	610	1150	845
M30 X 3.5	960	705	1510	1120	2100	1550
M30 X 2	1060	785	1680	1240	2320	1710
M36 X 3.5	1730	1270	2650	1950	3660	2700
M36 X 2	1880	1380	2960	2190	4100	3220

[1] in-tpi = nominal thread diameter in inches-threads per inch
[2] N-m = newton-meters
[3] lbs-ft= pounds-foot
[4] mm x pitch = nominal thread diameter in millimeters x thread Pitch

*Torque tolerance +0%, -15% of torquing values. Unless otherwise specified use torque values listed above
***NOTE**: 1 lbs-ft = 12 lbs-in

Manufactured by:

Dalkotech Group

RAD Technologies Inc.
2835, Chemin de l'Aéroport
Thetford Mines, Québec, Canada, G6G 5R7

T +1 418 338-4499 - F +1 418 338-2522

info@radtech.ca
radtech.ca

Printed in Canada